GX 12-100

12V 100Ah

DELTA GX are sealed maintenance-free lead-acid batteries with gas recombination system (VRLA). Are manufactured by GEL technology (electrolite immobilized by the addition of fumed silica). DELTA GX batteries are less prone to electrolyte drainage and acid stratification.

Accordingly, gel technology offers advantage in applications where long life and deep-cycling are prime requirements , e.g. in motive power for in-plant vehicles or renewable energy systems.

The series is highly reliable and has a service-life up to 15 years.

Battery construction

Element	Positive plate	Negative plate	Case	Lid	Valve	Terminal	Separator	Electrolyte
Material	Lead dioxide	Lead	ABS		Rubber	Copper	Fiberglass	Acid

Specifications

Nominal voltage.....12 V
Cell.....6
Design life.....15 years
Nominal capacity (25°C)
10 hours rate (10 A; 1,8 V/cell).....100 Ah
5 hours rate (17,5 A; 1,75 V/cell).....87,5 Ah
1 hours rate (62,5 A; 1,65 V/cell).....62,5 Ah
Self-discharge.....3% capacity per month 20°C

Internal resistance (25°C).....5 mΩ

Performance & characteristics

- Long service life;
- Deep discharge stability;
- Temperature stability characteristics;
- Excluded acid leaks, guaranteed safe operation with other
- There is no gas evolution, enough natural ventilation;
- Operation in any position;
- Maintenance-free. Do not require distillate topping;
- The battery case is made of flame retardant ABS plastic.

Operating temperature range

Discharge.....-20÷60°C
Charge.....-10÷60°C
Storage.....-20÷60°C
Maximum dischsrge current (25°C).....900A (5sec)
Cycle mode (2,35÷2,4 V/cell)
Max.charge current.....20 A
Temperature correction factor.....30 mV/°C
Standby mode (2,25÷2,3 V/cell)
Temperature correction factor.....20 mV/°C

Dimensions (±2mm)

Length, mm.....330
Width, mm.....171
Height, mm.....215
Height over terminals, mm.....220
Weight (±3%), kg.....32

Application

- Uninterruptable power supply
- Communication system
- Renewable energy systems
- Total energy system

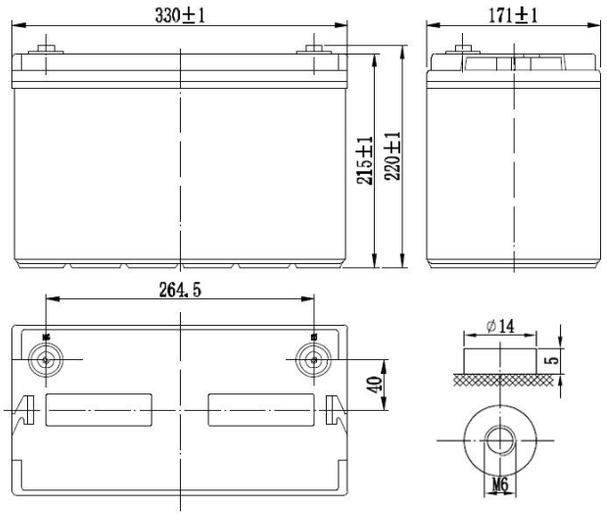

Layout

B

Terminal type

Insert Ø6 mm

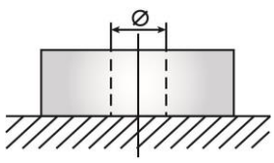

Discharge Constant Current, A (25°C)

V/cell	15 min	30 min	45 min	1 h	3 h	4 h	5 h	8 h	10 h
1,60	185	108	80,5	66,2	27,9	22,4	19,0	13,0	10,8
1,65	178	104	78,7	62,5	27,7	21,9	18,3	12,7	10,6
1,70	164	96,0	73,0	61,5	27,2	21,5	18,0	12,5	10,5
1,75	153	93,0	71,3	60,5	26,9	21,1	17,5	12,2	10,3
1,80	143	91,0	70,0	57,4	25,3	20,3	17,2	11,9	10,0

Discharge Constant Power, W/cell (25°C)

V/cell	15 min	30 min	45 min	1 h	3 h	4 h	5 h	8 h	10 h
1,60	321	199	150	124	52,8	42,3	35,8	24,6	20,4
1,65	315	188	146	118	51,2	41,4	35,4	24,4	20,3
1,70	299	183	137	114	50,9	41,2	35,0	24,1	20,1
1,75	294	177	134	111	49,1	40,6	34,4	23,9	19,9
1,80	279	171	131	104	48,5	40,2	34,0	23,5	19,3

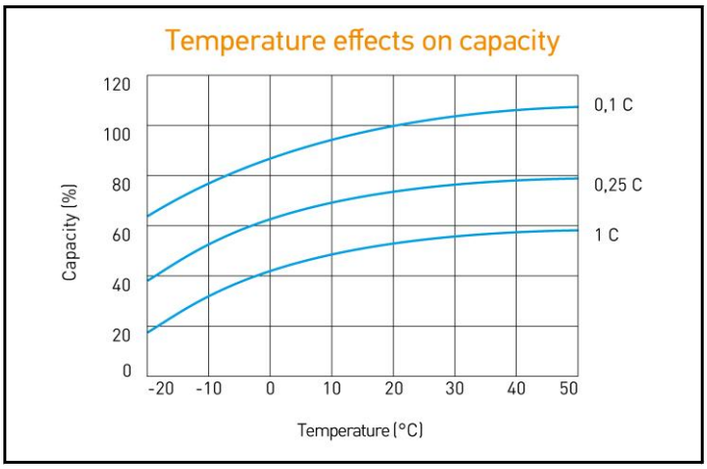

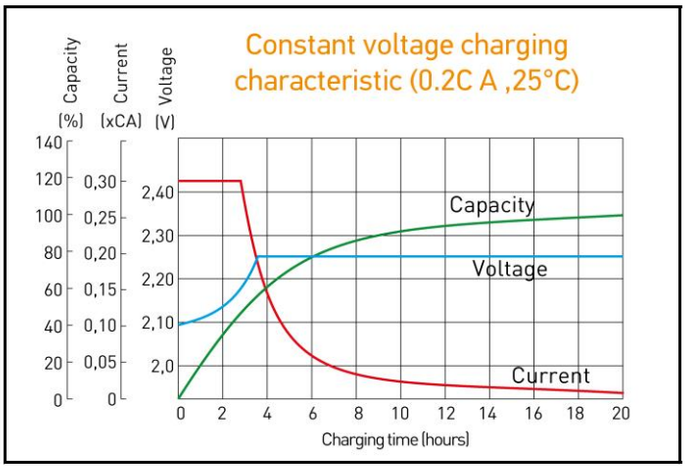

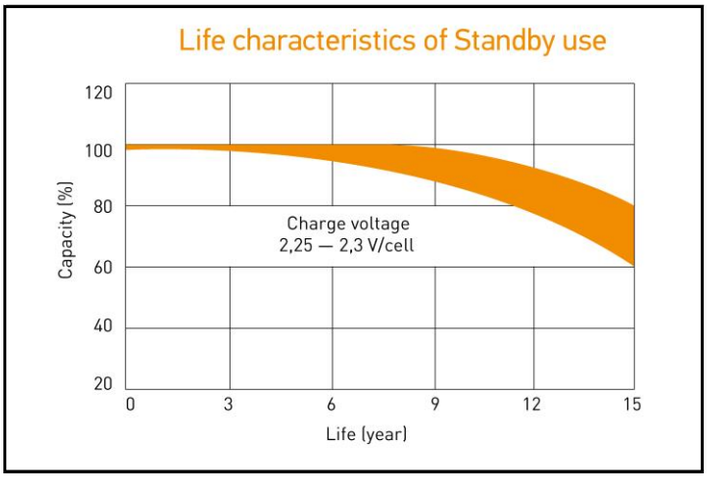

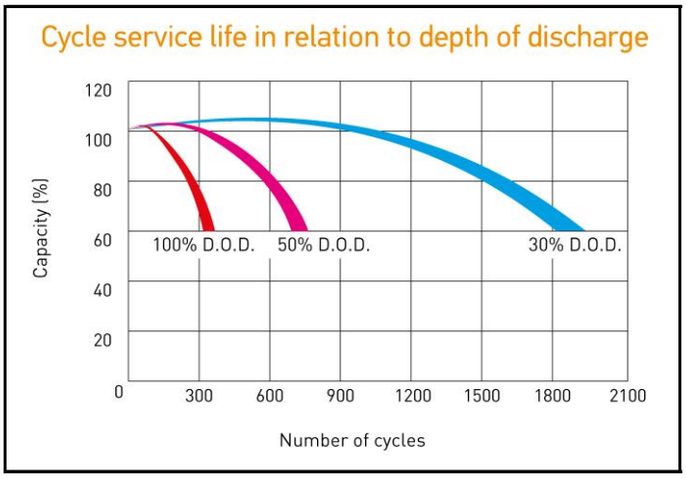

ALL DATA IS SUBJECT TO CHANGE WITHOUT NOTICE